Common Simulation Framework (CSF)

SEA is under contract to MoD for the delivery of a Common Simulation Framework (CSF) to enhance training in the Land environment.
The CSF capability is a key enabler to collective training.

CSF is essentially an architecture specifically designed for blending Live, Virtual and Constructive (LVC) training.

The main deliverable under the CSF contract is a Single Common Interface (SCI) which dynamically manages data from legacy simulations with the potential to combine live, tactical and operational-level training facilities.

The SCI has a logging and replay facility which provides a common source of data for After Action Review. The SCI is also capable of stimulating C4I systems, such as eBowman. Overlaid on top of the simulation layer is an ISTAR workstation 'plug-in' application, which provides 3D visualisation across the training battlespace. Linking systems in this way generates synergies, enhancing training value while at the same time reducing the expense associated with live training.

The SCI interfaces with the simulation protocols widely in use today, namely DIS and HLA. As required, additional interfaces can be developed quickly and easily. A plug-and-play design philosophy means that the system can be quickly reconfigured for different training scenarios.

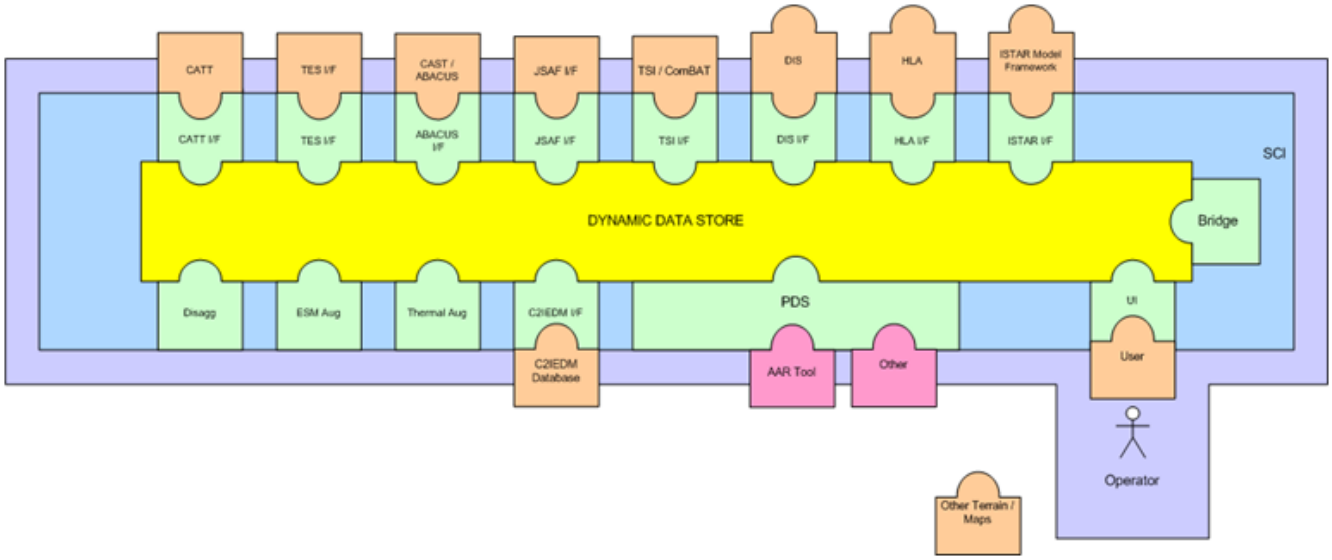

CSF's Single Common Interface (SCI) plug-and-play architecture provides flexibility to reconfigure training scenarios quickly and easily.

The SCI's bridging interface allows training systems in different sites to interact over an Internet Protocol-based network (such as the Joint Multinational Interoperability Assurance Network (JMNIAN)), resulting in a system which is scalable from the very small to the very large.

Other key features of CSF include:

- Sieving, Filtering and Throttling to harmonise the flow of data between training sites
- Augmentation of simulation entities to deliver enhanced realism (for example, the disaggregation of assets when passing data from operational to tactical level systems)